CYLINDER HEAD

SERVICE TOOLS

Description	Part Number	Page
CAMSHAFT LOCKING TOOL	529 036 206	12
ENGINE LEAK DOWN TEST KIT	529 035 661	5
PTO ADAPTER	529 036 273	5
VALVE SPRING COMPRESSOR CUP	529 036 209	18
VALVE SPRING COMPRESSOR	529 035 724	18

SERVICE TOOLS – OTHER SUPPLIER

Description	Part Number	Page
SNAP-ON VALVE HOLDER	VL2	21
SNAP-ON VALVE STEM SEAL PLIERS	YA 8230	19

VALVE COVER

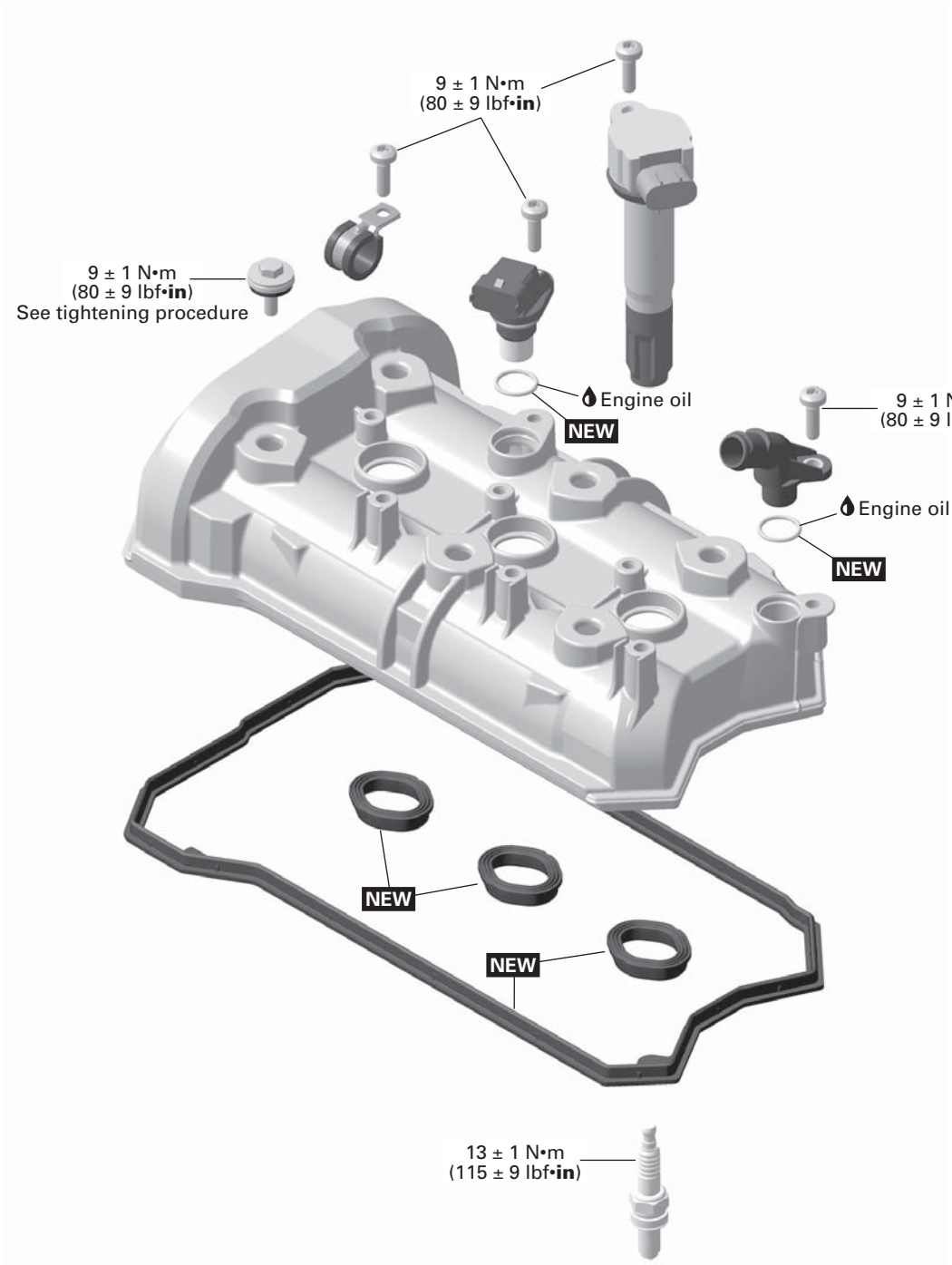

NEW = Component must be replaced when removed.

smr2014-020-001_a

CAMSHAFTS

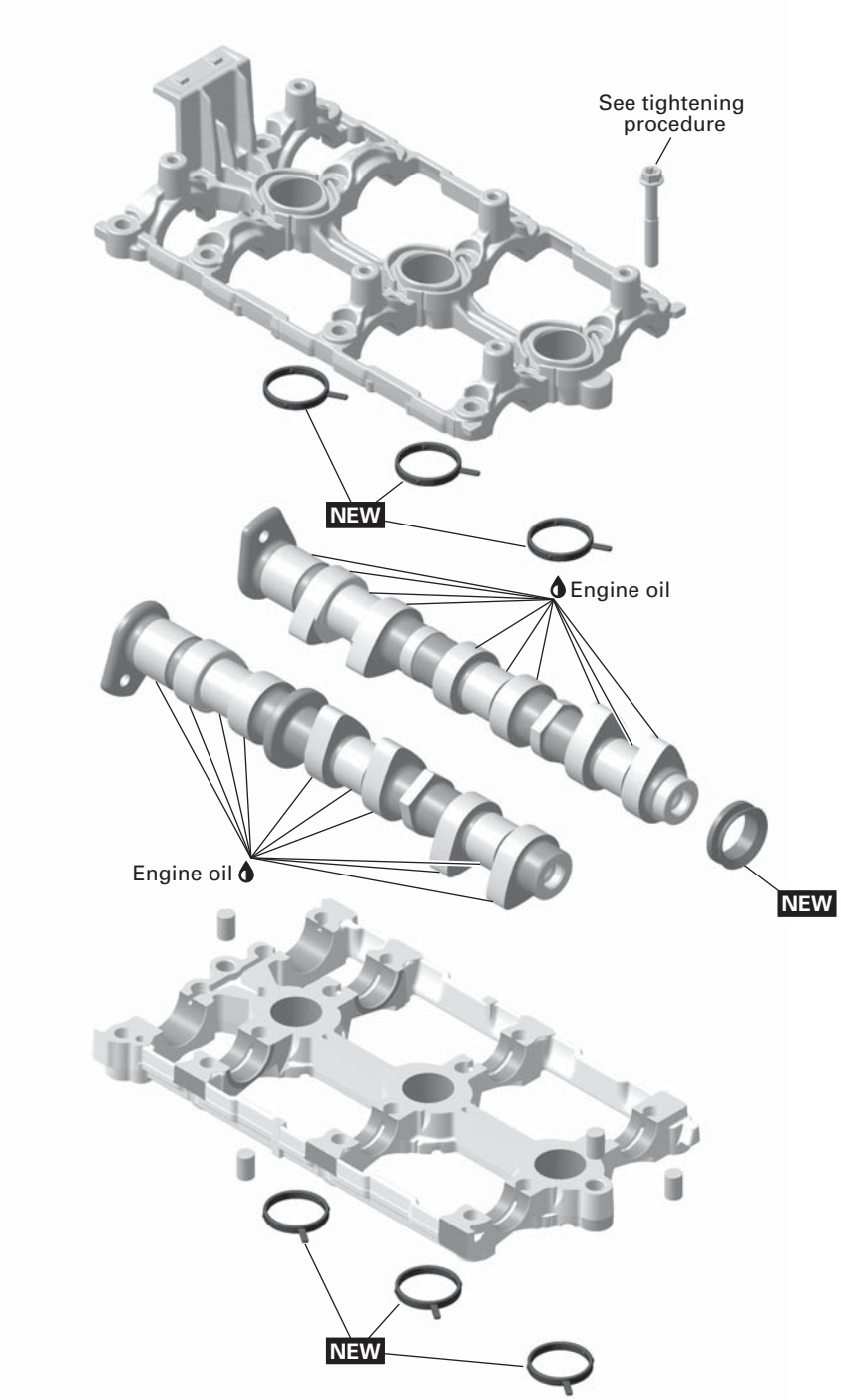

NEW = Component must be replaced when removed.

smr2014-020-002_a

CYLINDER HEAD

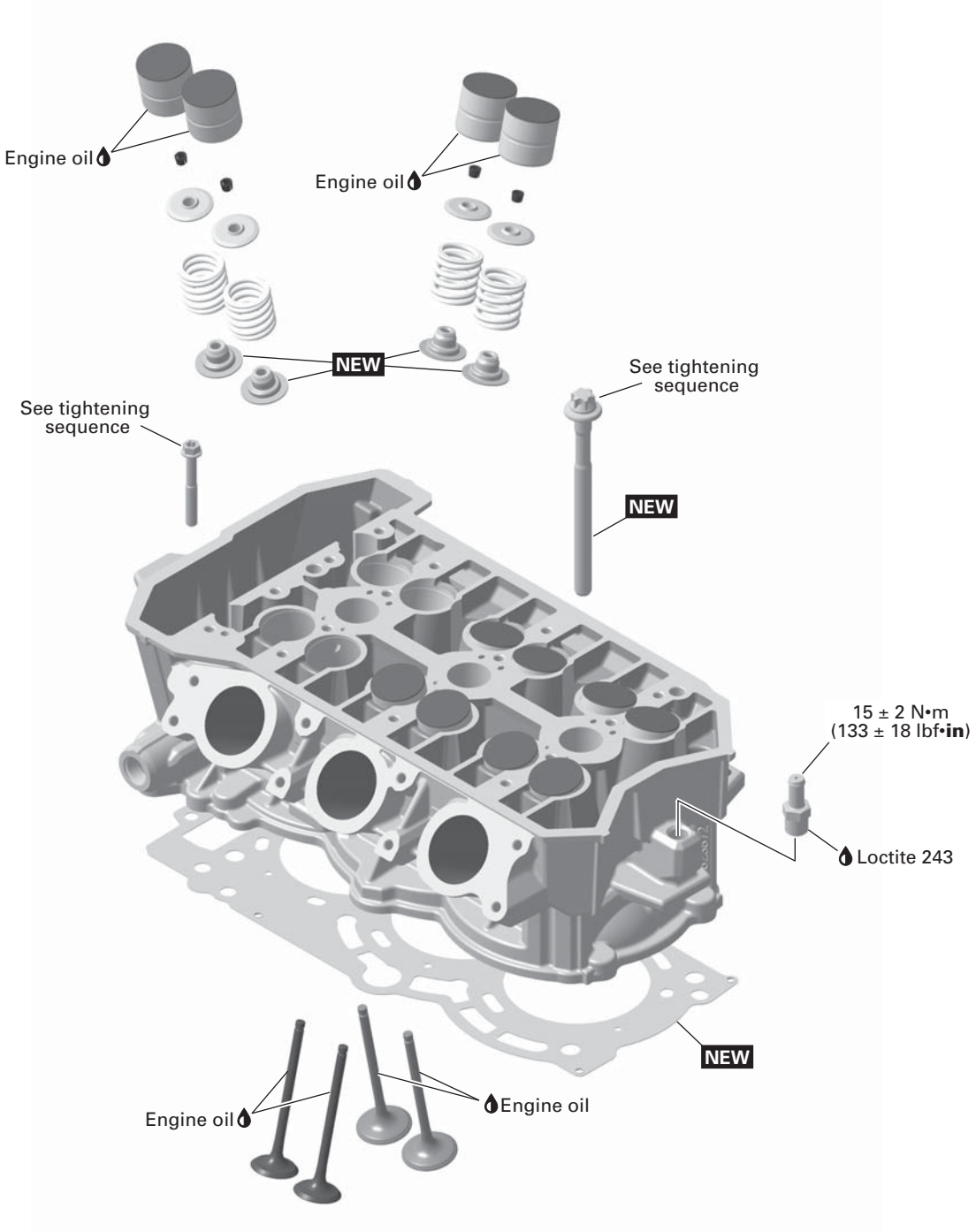

NEW = Component must be replaced when removed.

smr2014-020-003_a

GENERAL

NOTE: For a better understanding, some illustrations are taken with engine out of the vehicle.

When disassembling parts that are duplicated in the engine, (e.g.: valves, springs, etc.), it is strongly recommended to note their position and to keep the parts of the same assembly as a "group". If you find a defective component, it will be much easier to find the cause of the failure. Since parts were broke-in together during engine operation, they will maintain their matched fit when reassembled together within their "group".

INSPECTION

CYLINDER LEAK TEST

General

Before performing the cylinder leak test, verify the following:

– Clamp tightness
– Hoses condition.

NOTE: For best accuracy, the leak test should be done with the engine at normal operating temperature.

CAUTION Engine parts could be hot.

NOTE: The following steps are the same for each cylinder.

Preparation

1. Remove the *VALVE COVER*, see procedure in this subsection.
2. Remove spark plug.
3. Turn the engine counterclockwise to bring piston to TDC of compression stoke. Use a dial gauge or a suitable tool to position the piston to TDC.

REQUIRED TOOL	
PTO ADAPTER (P/N 529 036 273)	

NOTE: The piston must be set precisely to TDC of compression stroke. If not, the engine will continue to rotate when pressure builds up.

Leak Test

1. Install a gauge adaptor into spark plug hole.

REQUIRED TOOL	
ENGINE LEAK DOWN TEST KIT (P/N 529 035 661)	

2. Connect the leak down tester to an adequate air supply.
3. Set gauge needle to zero.

NOTE: All testers have specific instructions on gauge operation and required pressure. Refer to manufacturer's instructions.

4. Supply combustion chamber with air pressure.
5. Note the amount or percentage of leakage (depending on tester).

LEAKAGE PERCENTAGE	ENGINE CONDITION
0% to 15%	Excellent condition
16% to 25%	Good condition
26% to 40%	Fair condition; reduced engine performance
41% and higher	Poor condition, diagnose and repair engine

Diagnosis

Listen for air leaks.

– Air escaping on intake port or throttle body means leaking intake valve(s).
– Air escaping on exhaust port means leaking exhaust valve(s).
– Air bubbles out of coolant tank means leaking cylinder head gasket.
– Air or coolant escaping from cylinder head means damaged gasket or loosened screws.
– Air escaping into crankcase area means excessively worn cylinder or broken piston rings.
– Air or oil escaping from crankcase means damaged gasket or loosened screws.

Repair Tips

Blue exhaust gas means damaged or worn piston rings or valve stem seals.

White exhaust gas means damaged cylinder head gasket.

Coolant tank cap opening without overheat means damaged cylinder head gasket.

Leaking valves can be caused by carbon deposits or burnt valve face.

Assembly

Reverse the preparation procedure.

TROUBLESHOOTING

Always check for fault codes. If a fault code is detected, service the fault code first. Refer to *DIAGNOSTIC SYSTEM AND FAULT CODES* subsection.

NOTE: When diagnosing an engine problem, always perform the cylinder leak test. This will help pinpoint a problem. Refer to *CYLINDER LEAK TEST* in this subsection.

UNUSUAL ENGINE NOISE OR VIBRATIONS

1. Discharged or defective valve lifters.
   - *Check engine oil pressure, refer to LUBRICATION SYSTEM subsection.*
   - *Replace valve lifters.*
2. Camshaft(s) or camshaft holder(s) worn out.
   - *Check and replace damaged parts.*
3. Faulty chain tensioner.
   - *Replace chain tensioner. Refer to TIMING CHAIN subsection.*
4. Chain guide(s) worn out.
   - *Replace chain guide(s). Refer to TIMING CHAIN subsection.*
5. Stretched timing chain or worn out sprockets.
   - *Replace timing chain and sprockets. Refer to TIMING CHAIN subsection.*
6. Loose timing chain gear screws.
   - *Retighten screws with recommended torque.*
7. Incorrect camshaft timing.
   - *Replace damaged components and readjust camshaft timing.*

OIL LEAKAGE FROM CYLINDER HEAD

1. Leaking valve cover gasket.
   - *Replace valve cover gaskets and retighten valve cover with recommended torque.*
   - *Check valve cover for cracks or other damage.*
2. Leaking spark plug tube O-rings.
   - *Replace spark plug tube O-rings.*
   - *Clean spark plug area from oil spillage.*
3. Blow-by connector is leaking.
   - *Replace blow by connector O-ring.*
4. Leaking cylinder head gasket.
   - *Check cylinder head for damage.*
   - *Replace cylinder head gasket and retighten screws with recommended torquing procedure.*

ENGINE SUDDENLY TURNS OFF OR LACKS ACCELERATION OR POWER

1. Incorrect camshaft timing.
   - *Replace damaged components and readjust camshaft timing.*
2. Leaking intake or exhaust valves.
   - *Perform a CYLINDER LEAK TEST. Repair or replace damaged components.*
3. Broken valve spring(s).
   - *Replace defective parts.*

PROCEDURES

VALVE COVER

Valve Cover Access

Remove central body. refer to *BODY*.

Remove the air intake silencer. Refer to *AIR INTAKE SYSTEM* subsection.

Disconnect vent tube from the blow-by-connector.

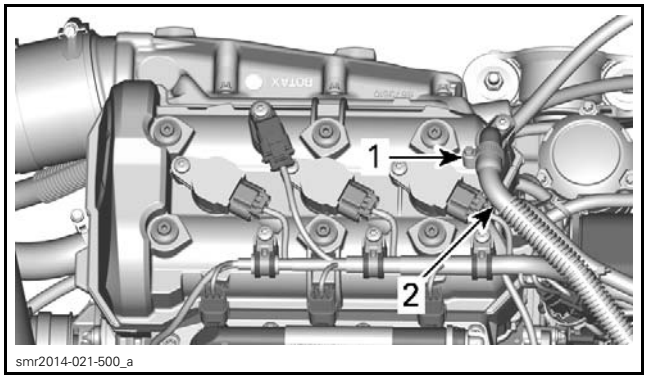

1. *Clamp*
2. *Vent tube*

Valve Cover Removal

1. Unplug CAPS (camshaft position sensor).
2. Unplug ignition coils.

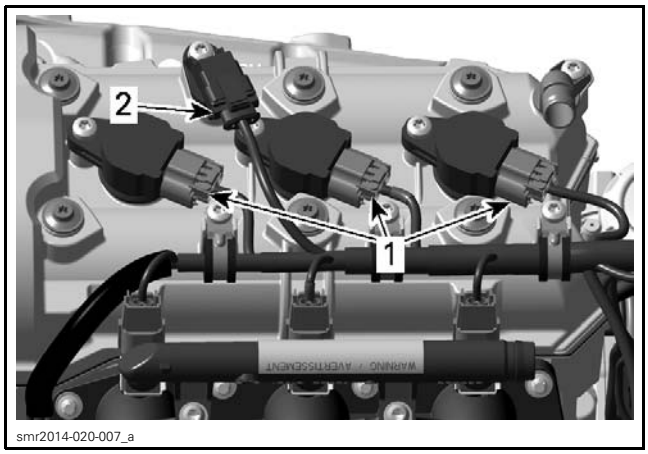

smr2014-020-007_a

1. *Ignition coil connectors*
2. *CAPS connector*

3. Remove ignition coils with gaskets.

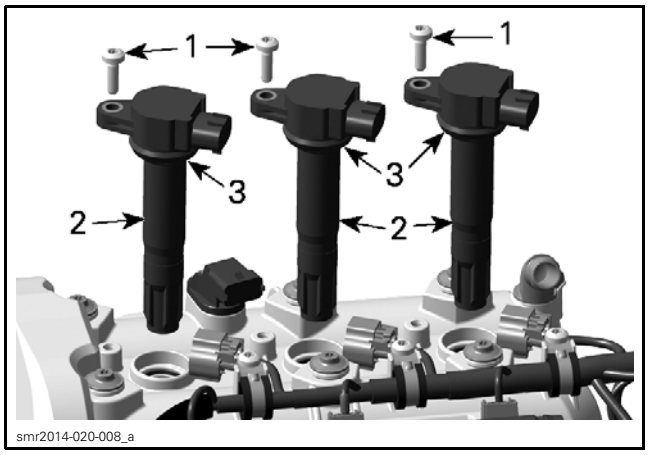

smr2014-020-008_a

1. *Retaining screws*
2. *Ignition coils*
3. *Gaskets*

4. Remove screws securing the electrical harness to the valve cover.

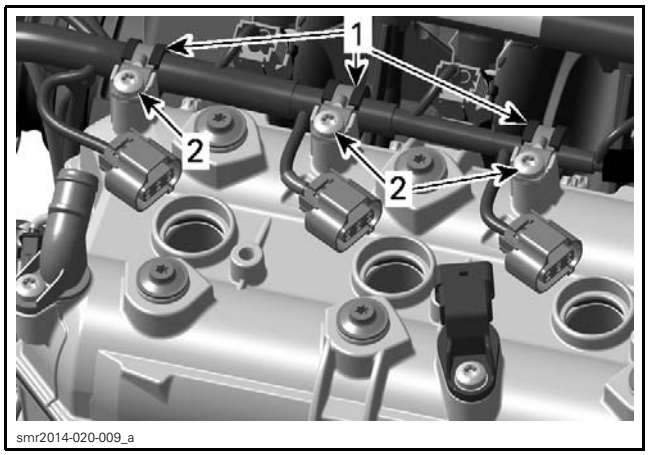

smr2014-020-009_a

1. *Cable clamps*
2. *Retaining screws*

5. Remove valve cover retaining screws.

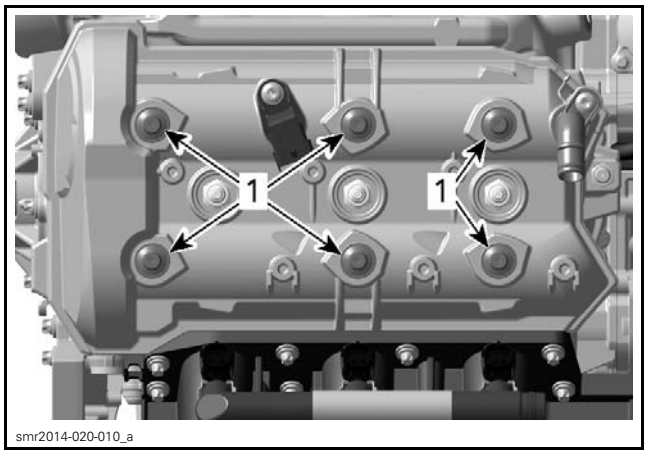

smr2014-020-010_a

1. *Valve cover screws*

6. Remove the valve cover and its gasket.

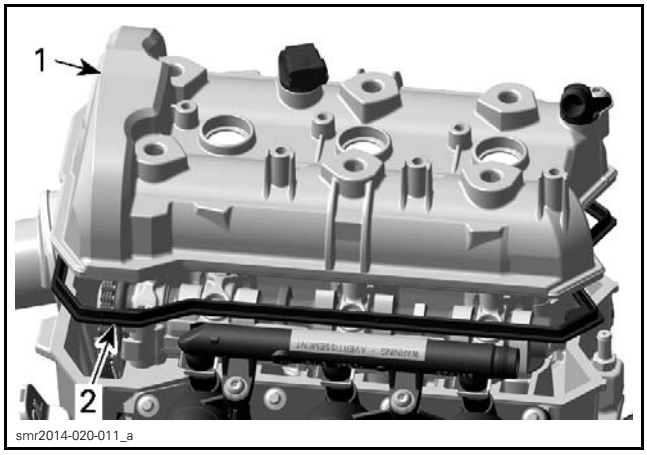

smr2014-020-011_a

1. *Valve cover*
2. *Gasket*

7. Remove valve cover small gaskets (spark plug tubes).

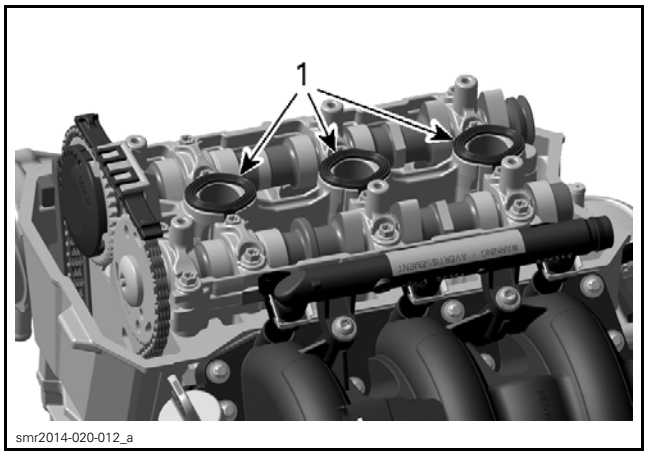

smr2014-020-012_a

1. *Small gaskets*

Valve Cover Inspection

Check the valve cover for cracks or other damage.

Check if the valve cover gaskets are brittle, hard or otherwise damaged.

Replace defective parts.

Valve Cover Installation

For installation reverse the removal procedure. However, pay attention to the following details.

1. Properly fit the small gaskets into the camshaft holder grooves.
2. Properly fit the large gasket into the valve cover groove.
3. Apply engine oil to the sealing surface of the V-ring.

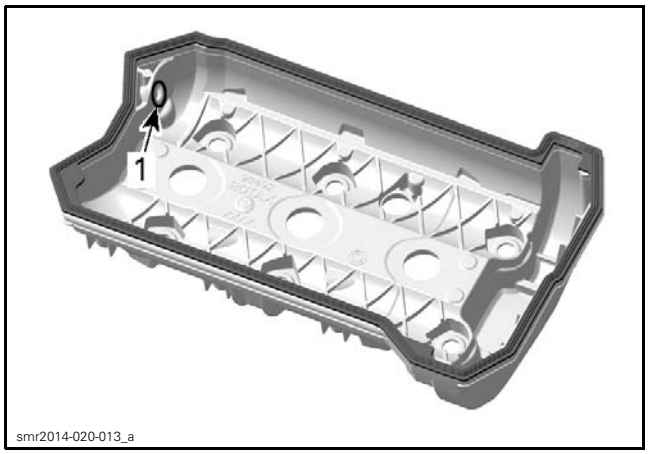

INSIDE VALVE COVER
1. Apply engine oil here

4. If engine is in the vehicle, slide the valve cover inside engine compartment by the LH side of the vehicle.
5. Install valve cover.

NOTICE **Adhere to the following procedure, otherwise damage to the V-ring will occur causing crankcase venting malfunction.**

5.1 Move the valve cover towards the MAG side.

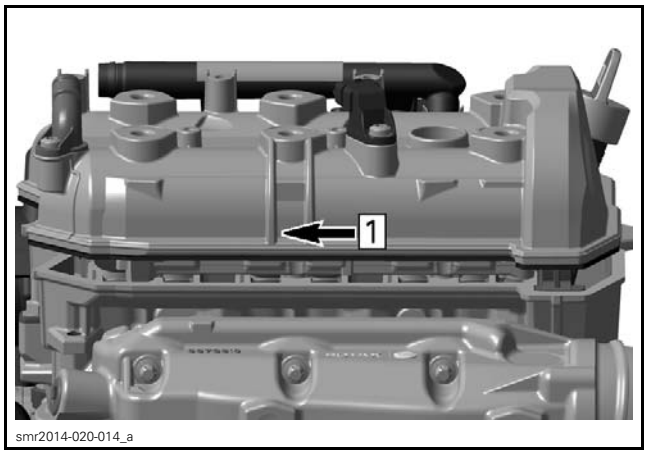

Step 1: Move valve cover towards MAG side

5.2 Put valve cover onto cylinder head.

5.3 Push valve cover towards the PTO side to ensure that the V-ring properly seals on sealing surface inside the cover.

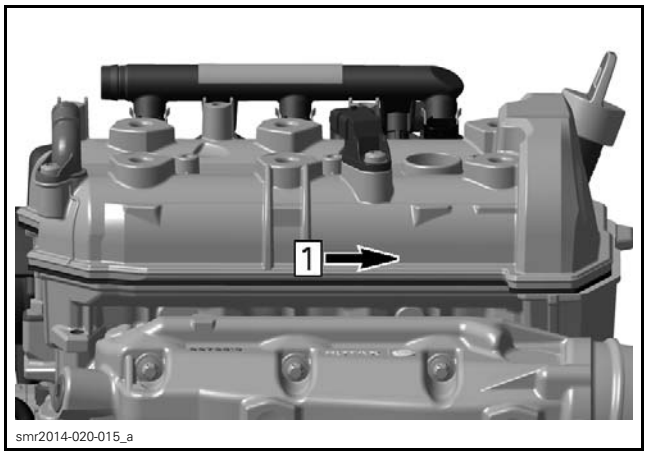

Step 1: Push valve cover towards PTO side

6. Install valve cover screws and tighten as per following sequence:

VALVE COVER SCREWS TIGHTENING PROCEDURE	
Step A	9 N•m ± 1 N•m (80 lbf•**in** ± 9 lbf•**in**)
Step B	9 N•m ± 1 N•m (80 lbf•**in** ± 9 lbf•**in**)

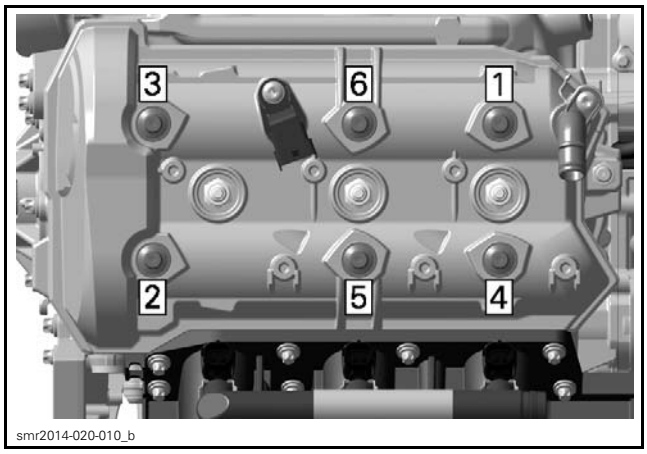

TIGHTENING SEQUENCE

CAMSHAFTS

Camshaft Removal

1. Remove *VALVE COVER*, see procedure in this subsection.
2. Lock crankshaft, refer to *CRANKSHAFT LOCKING PROCEDURE* in the *CYLINDER BLOCK* subsection.

Remove timing chain tensioner. Refer to *TIMING CHAIN* subsection.

3. Remove:
   3.1 Breather cover

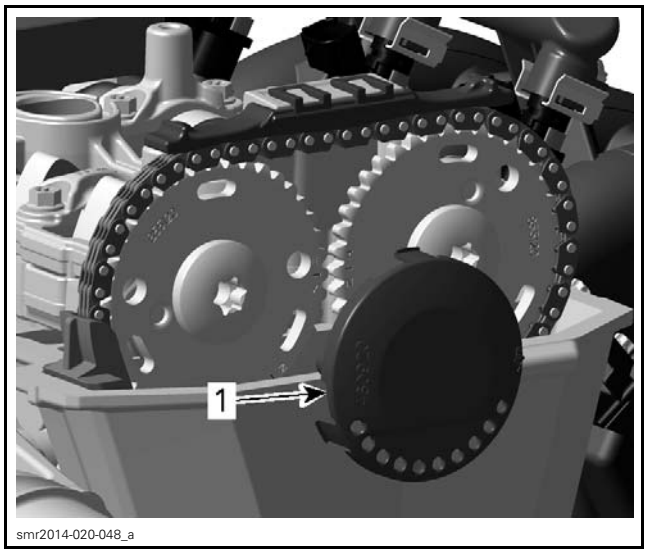

1. *Breather cover*

   3.2 Upper timing chain guide
   3.3 Timing chain guide.

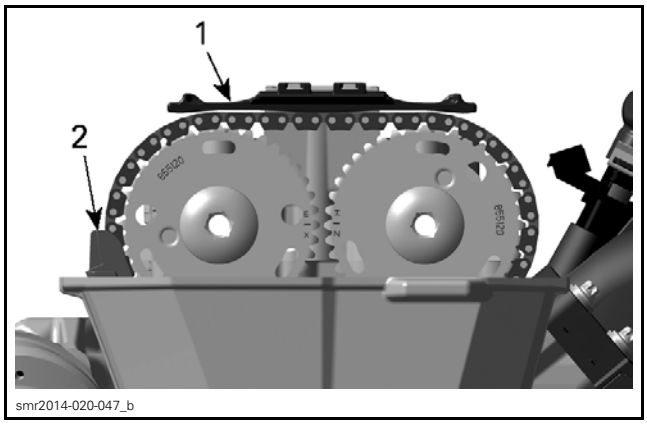

1. *Upper timing chain guide*
2. *Timing chain guide*

4. Remove timing chain from camshaft timing gears.
5. Remove camshaft holder retaining screws (16).

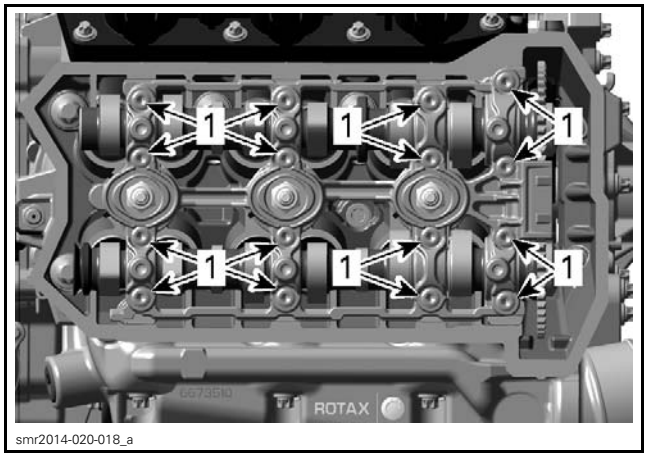

1. *Camshaft holder retaining screws*

6. Remove the camshaft holder upper half.

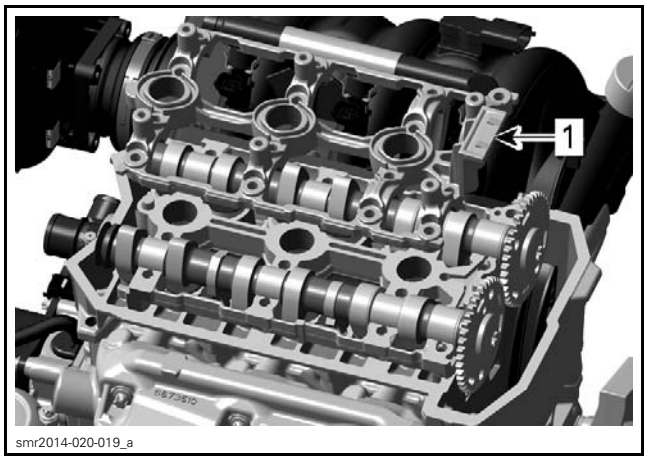

1. *Upper half of camshaft holder*

7. Put timing chain aside.
8. Remove camshafts with timing gears.

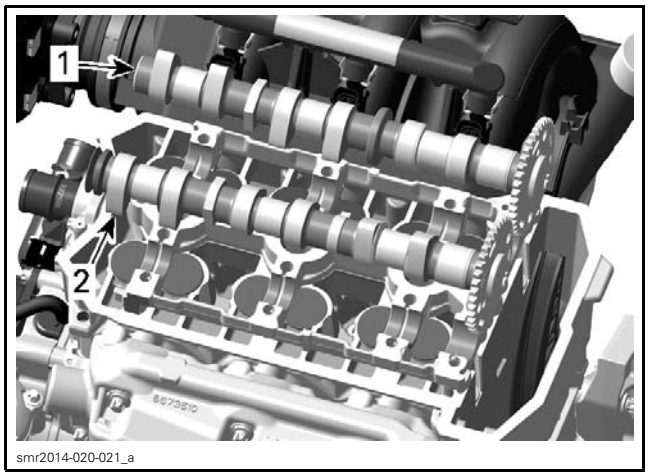

1. Intake camshaft
2. Exhaust camshaft

9. Remove camshaft timing gears only if necessary. Refer to *TIMING CHAIN* subsection.

Camshaft Inspection

1. Check each lobe and bearing journal for scoring, scuffing, cracks, or other signs of wear.
2. Check V-ring if it is brittle, hard or otherwise damaged.
3. Measure camshaft bearing journal diameter and lobe height, using a micrometer.

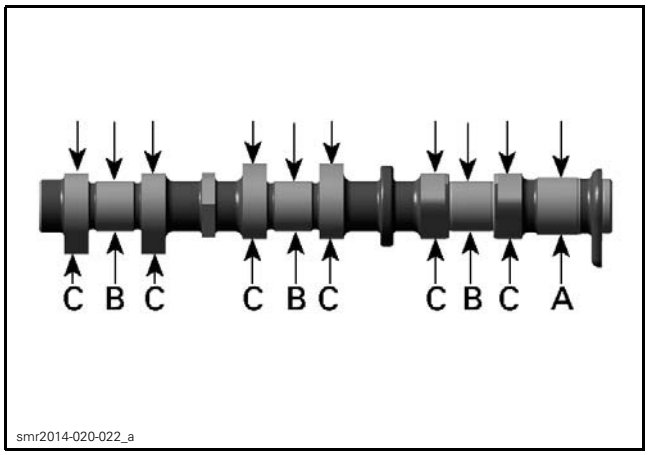

A. Camshaft journal (PTO)
B. Camshaft journal (center and MAG)
C. Camshaft lobes

CAMSHAFT JOURNAL DIAMETER	
PTO JOURNAL (A)	
NEW	25.967 mm to 25.980 mm (1.0223 in to 1.0228 in)
SERVICE LIMIT	25.940 mm (1.0213 in)
CENTER AND MAG JOURNAL (B)	
NEW	22.957 mm to 22.970 mm (.9038 in to .9043 in)
SERVICE LIMIT	22.930 mm (.9028 in)

CAMSHAFT LOBE HEIGHT	
EXHAUST and INTAKE CAMSHAFT (C)	
NEW	38.35 mm to 38.55 mm (1.51 in to 1.518 in)
SERVICE LIMIT	38.33 mm (1.509 in)

Replace parts if necessary.

For camshaft journal radial clearance and camshaft holder bearing diameter refer to *CAMSHAFT HOLDER* in this subsection.

4. Check timing chain guide for wear, cracks or deformation. Replace as required.
5. Replace timing chain guide if any groove caused by timing chain exceeds service limit.

CHAIN GUIDE GROOVE DEPTH	
SERVICE LIMIT	1 mm (.039 in)

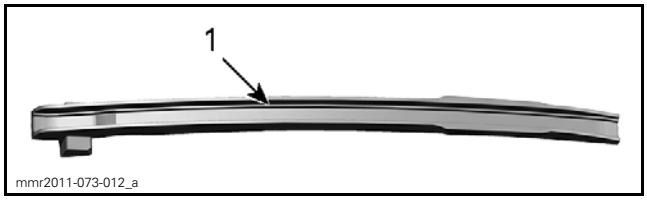

1. Timing chain guide

Camshaft Installation

The assembly is the reverse of the removal procedure. However pay attention to the following details.

1. Ensure crankshaft is still locked.
2. Apply engine oil on camshaft bearings.

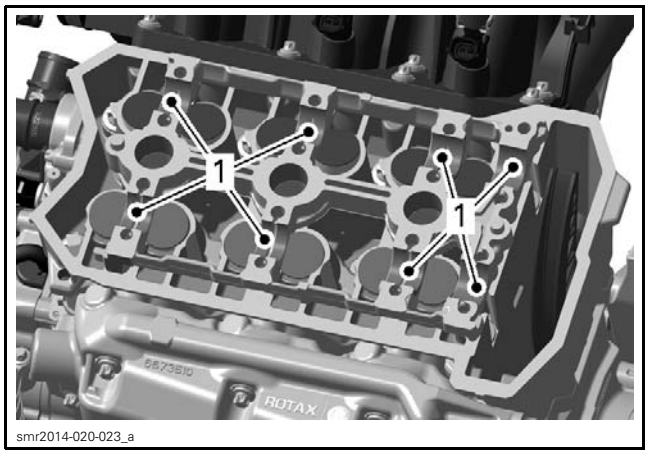

1. Areas where to apply engine oil

NOTE: The camshafts are not identical. Any mix-up of the components would lead to engine damage. The exhaust camshaft has a machined area on MAG side for the V-ring.

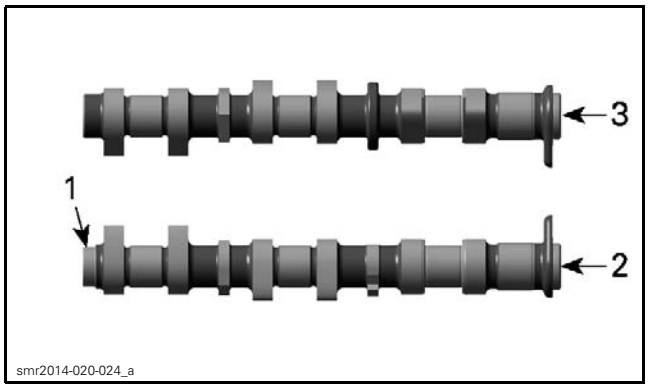

1. Machined area
2. Exhaust camshaft
3. Intake camshaft

3. If removed, reinstall camshaft timing gears on camshafts. Refer to *CAMSHAFT TIMING GEARS* in the *TIMING CHAIN* subsection.
4. Apply engine oil on camshaft journal diameter.
5. Install exhaust camshaft assembly with mark "EX" parallel to cylinder head gasket.

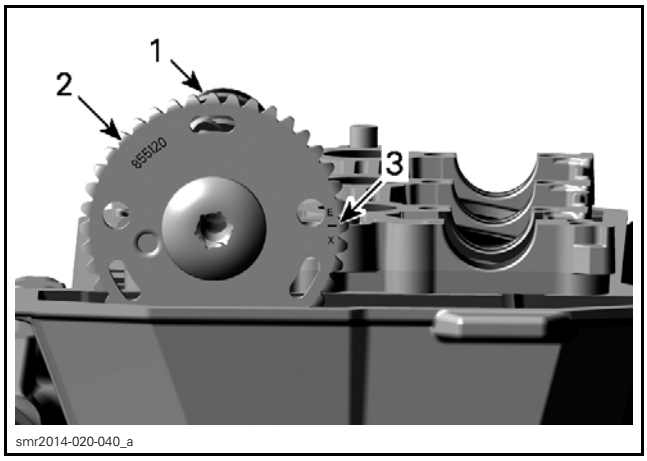

1. Exhaust camshaft
2. Camshaft timing gear
3. Mark "EX"

6. Install intake camshaft assembly with mark "IN" parallel to cylinder head gasket.

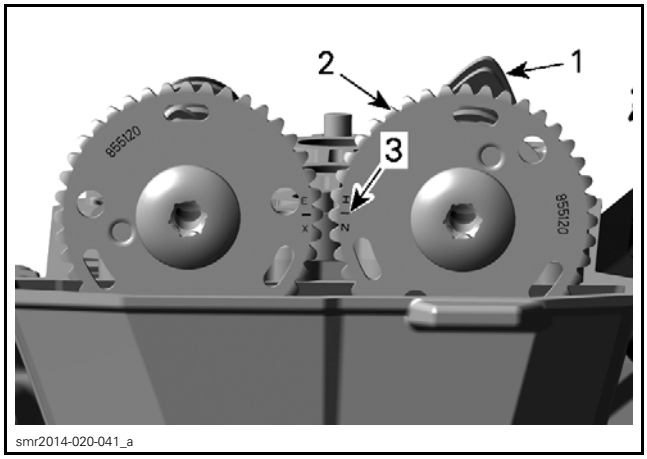

1. Intake camshaft
2. Camshaft timing gear
3. Mark "IN"

7. Install the camshaft holder upper half, then tighten screws as per following sequence:

CAMSHAFT HOLDER TIGHTENING PROCEDURE	
STEP A	5 N•m ± 0.5 N•m (44 lbf•**in** ± 4 lbf•**in**)

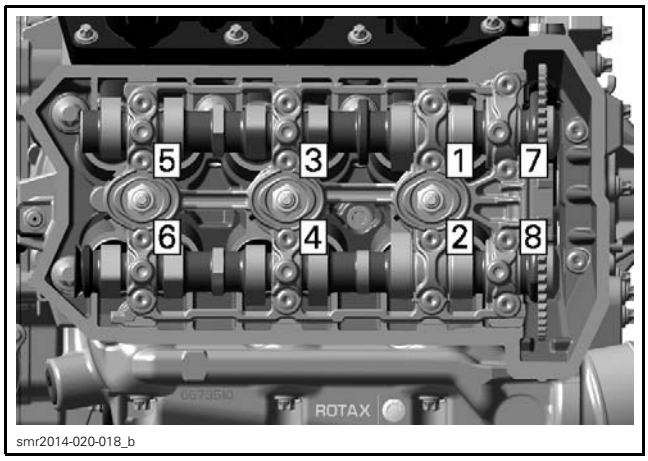

CAMSHAFT HOLDER TIGHTENING SEQUENCE - STEP A

CAMSHAFT HOLDER TIGHTENING PROCEDURE	
STEP B	9 N•m ± 1 N•m (80 lbf•**in** ± 9 lbf•**in**)

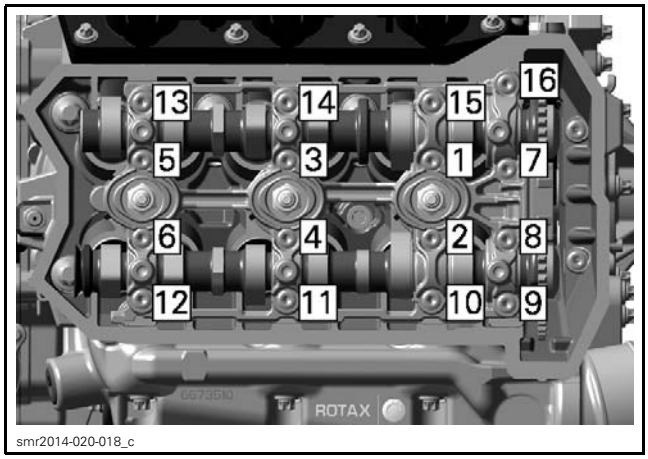

CAMSHAFT HOLDER TIGHTENING SEQUENCE - STEP B

NOTE: After the reassembly of the camshafts is completed, check if camshafts can be turned easily.

8. Lock camshafts.

REQUIRED TOOL	
CAMSHAFT LOCKING TOOL (P/N 529 036 206)	

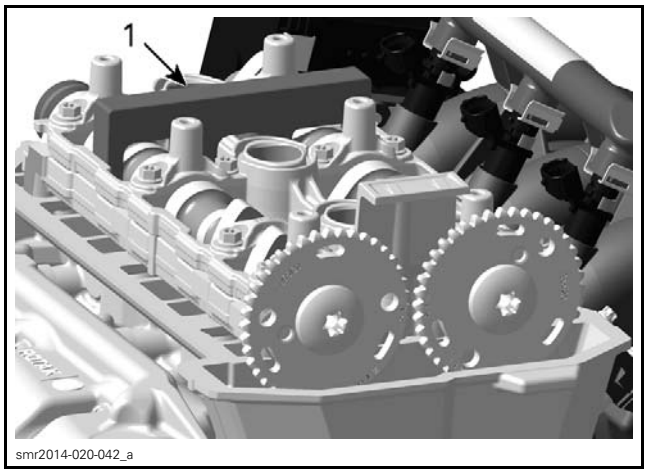

1. *Camshaft locking tool*

9. Lift timing chain out of timing chain compartment.
10. Pull timing chain up on exhaust side and install it on the exhaust camshaft timing gear.

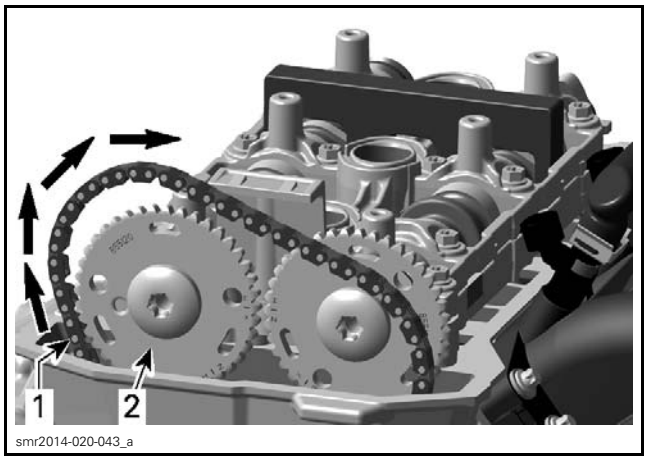

1. *Timing chain*
2. *Exhaust camshaft timing gear*

11. Pull timing chain towards intake side and install it on the intake camshaft timing gear.

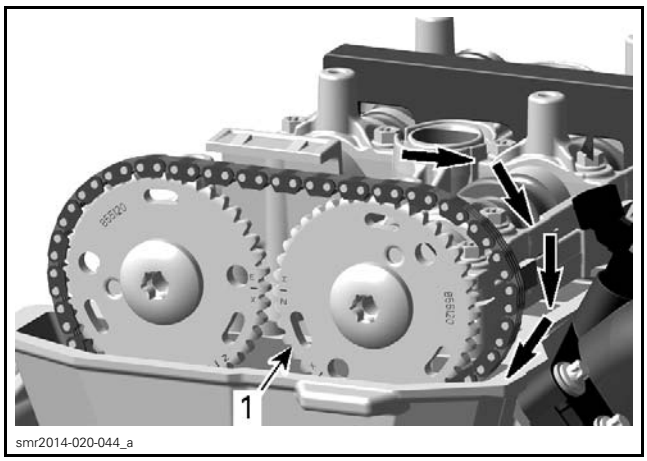

1. *Intake camshaft timing gear*

12. Install timing chain guide.

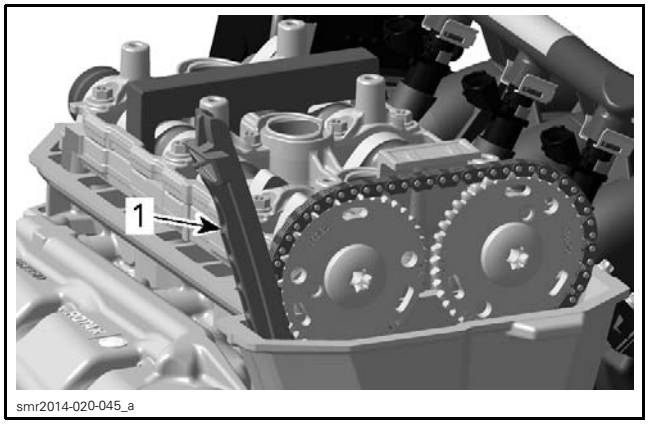

smr2014-020-045_a

1. Timing chain guide

13. Install upper timing chain guide on camshaft holder.

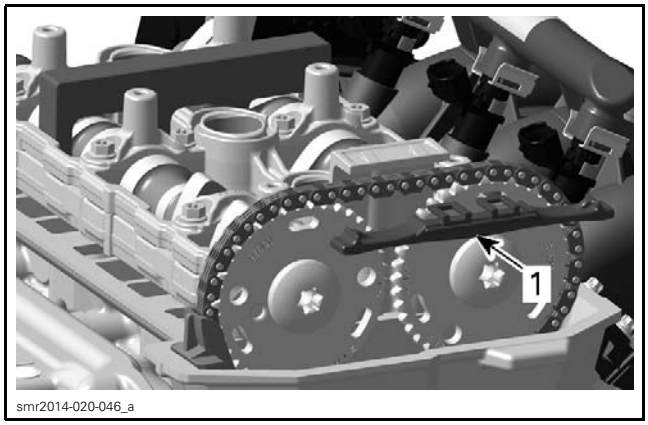

smr2014-020-046_a

1. Upper timing chain guide

14. Install *TIMING CHAIN TENSIONER*, refer to *TIMING CHAIN* subsection.

15. Ensure marks on camshaft timing gears are still aligned. If not, repeat procedure.

NOTICE **After installation of timing chain tensioner, the marks "IN" on intake and "EX" on exhaust camshafts must be aligned.**

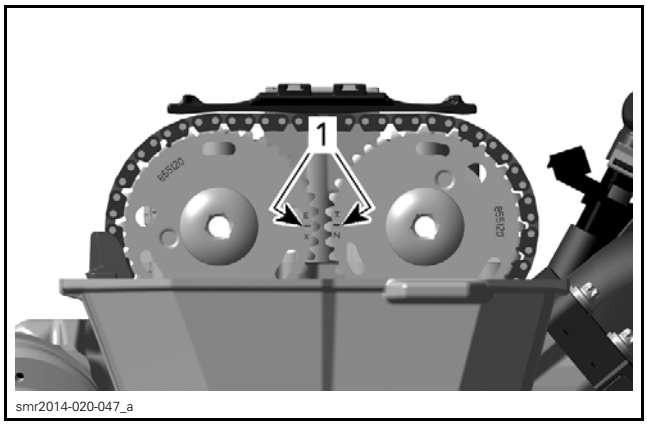

smr2014-020-047_a

CAMSHAFT TIMING GEARS
1. Marks must be aligned

16. Install breather cover.

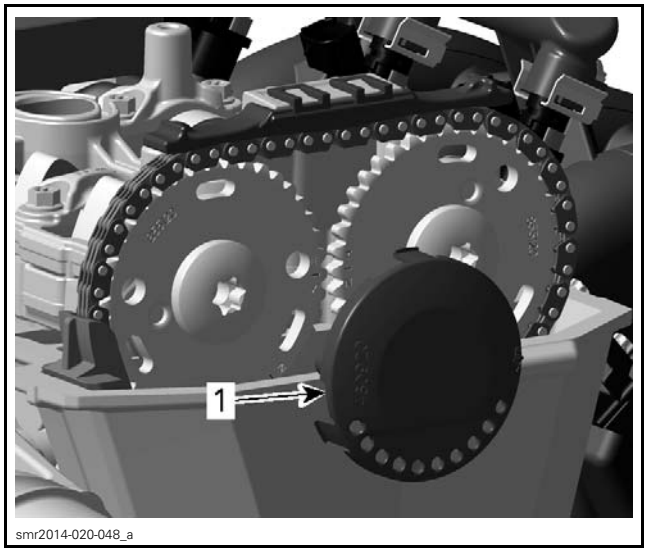

smr2014-020-048_a

1. Breather cover

17. Remove camshaft locking tool.

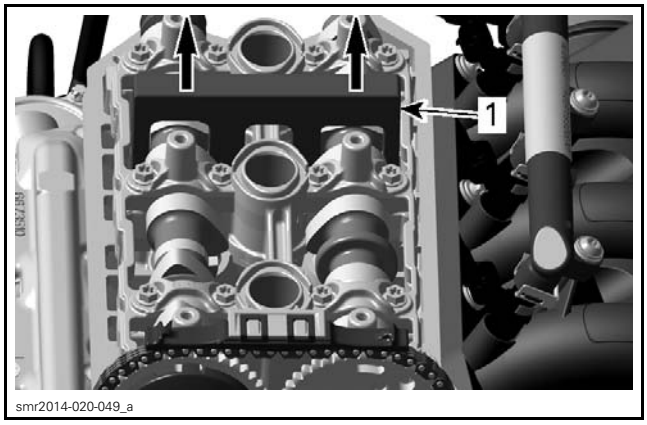

smr2014-020-049_a

1. Camshaft locking tool removal

18. Remove crankshaft locking tool.

CAMSHAFT HOLDER

Camshaft Holder Removal

Remove camshafts, see procedure in this subsection.

Remove the camshaft holder lower half with gaskets from cylinder head.

Remove gaskets from camshaft holder halves and discard gaskets.

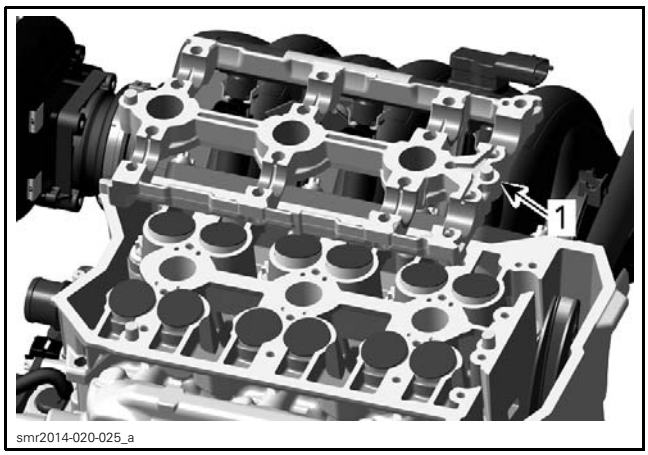

1. *Camshaft holder lower half*

Camshaft Holder Inspection

1. Check camshaft holder for scoring, scuffing, cracks, or other signs of wear.
2. Make sure oil orifices are not clogged. Blow them out with pressurized air.

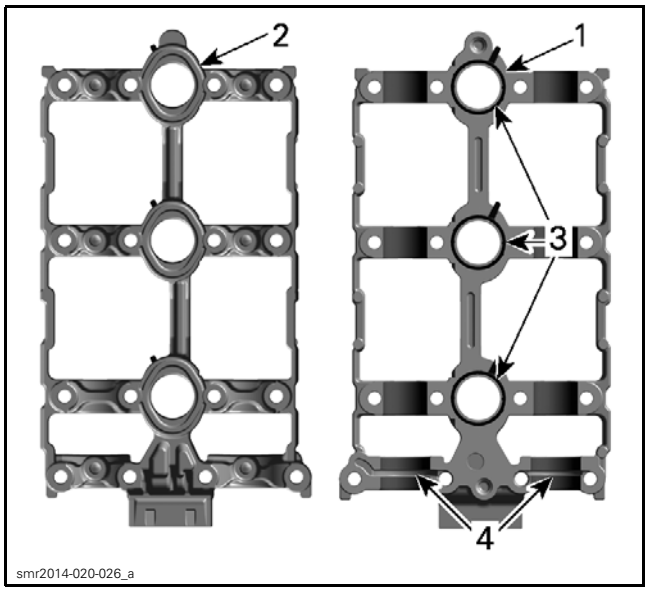

1. *Camshaft holder upper half - view from beneath*
2. *Camshaft holder upper half - view from above*
3. *Gaskets*
4. *Oil orifices*

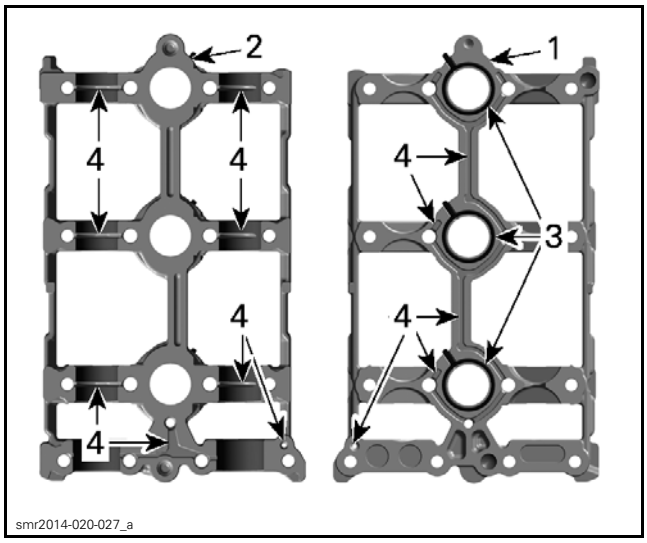

1. *Camshaft holder lower half - view from beneath*
2. *Camshaft holder lower half - view from above*
3. *Gaskets*
4. *Oil orifices*

Install camshaft holder on cylinder head.

Tighten camshaft holder screws to specification, refer to *CAMSHAFT INSTALLATION* in this subsection.

Measure camshaft holder bearing diameter.

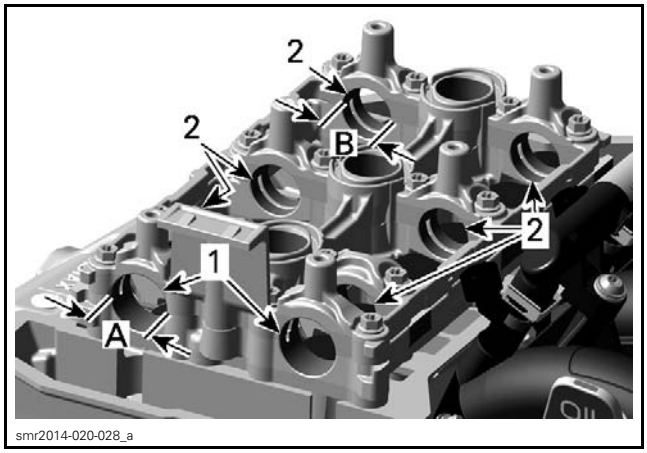

CAMSHAFT HOLDER BEARINGS

1. *PTO bearings*
2. *Center and MAG bearings*

A. *Diameter PTO bearing*
B. *Diameter center and MAG bearing*

CAMSHAFT HOLDER BEARING DIAMETER	
PTO BEARING	
NEW	26.000 mm to 26.021 mm (1.024 in to 1.024 in)
SERVICE LIMIT	26.050 mm (1.026 in)
CENTER AND MAG BEARING	
NEW	23.000 mm to 23.021 mm (.906 in to .906 in)
SERVICE LIMIT	23.050 mm (.907 in)

Measure clearance between camshaft journals and camshaft holder, using the plastic feeler gauge.

NOTE: The plastic feeler gauge is available at automotive parts retailer.

Install camshaft holder lower half on cylinder head.

Place the camshafts in the camshaft holder lower half and apply a plastic-gauge on the camshaft bearing journal.

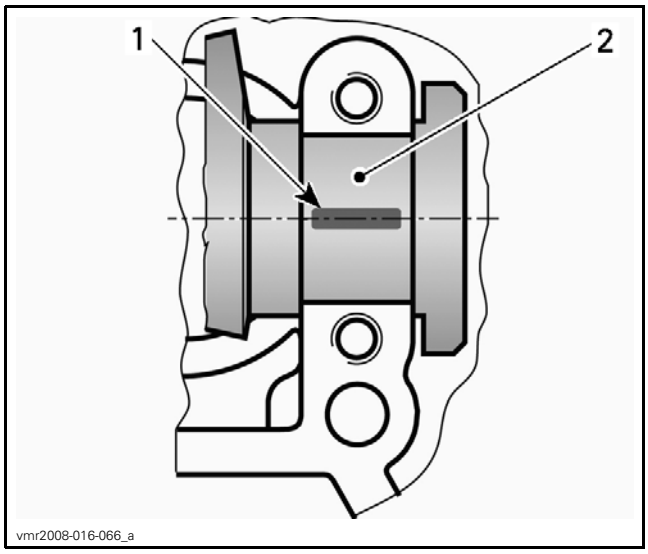

TYPICAL
1. *Plastic gauge*
2. *Camshaft bearing journal*

Install camshaft holder upper half in the proper position and tighten screws to specification, refer to *CAMSHAFT INSTALLATION* in this subsection.

Unfasten camshaft holder.

Measure the maximum width of the pressed plastic gauge with the corresponding graduated scale.

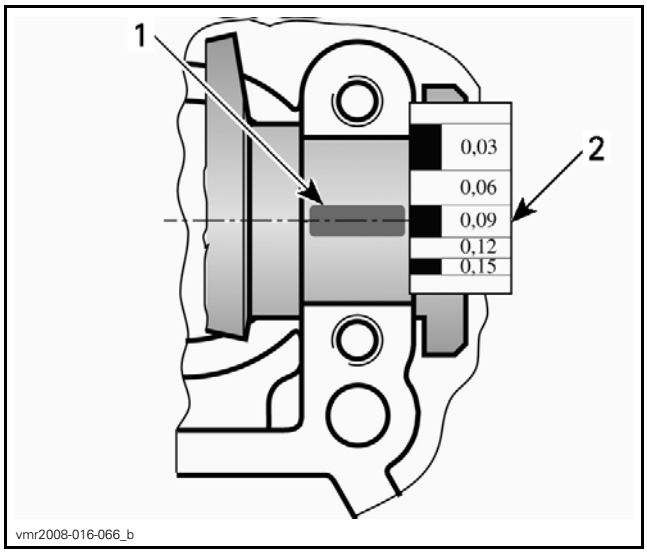

TYPICAL
1. *Pressed plastic gauge*
2. *Graduated scale*

CAMSHAFT JOURNAL RADIAL CLEARANCE	
PTO, CENTER AND MAG BEARING	
NEW	0.020 mm to 0.054 mm (.001 in to .002 in)
SERVICE LIMIT	0.080 mm (.003 in)

Replace parts if necessary.

Camshaft Holder Installation

Install camshaft holder lower half.

Continue procedure as explained in *CAMSHAFT INSTALLATION* in this subsection.

HYDRAULIC VALVE LIFTERS

Hydraulic Valve Lifter Removal

NOTE: Hydraulic valve lifter are maintenance free.

See procedures in this subsection to remove:
- Valve cover
- Camshafts
- Camshaft holder.

Pull hydraulic valve lifter off the cylinder head.

NOTE: When disassembling the hydraulic valve lifter, it is strongly recommended to note their original position.

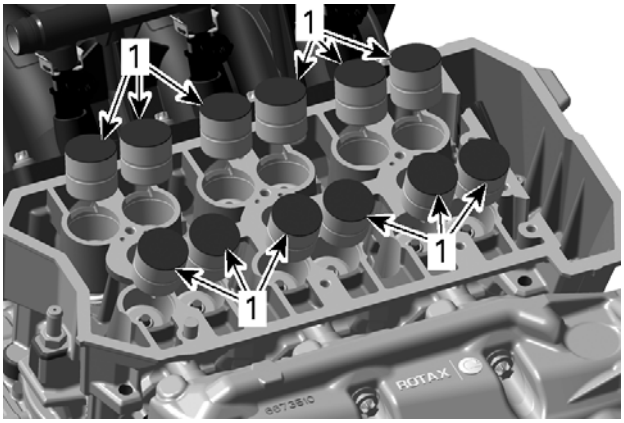

smr2014-020-030_a

1. *Hydraulic valve lifter*

Hydraulic Valve Lifter Inspection

1. Check surface of hydraulic valve lifter for scoring or other damage.
2. Measure valve lifter diameter. Replace if out of specification.

HYDRAULIC VALVE LIFTER	
NEW	28.354 mm to 28.370 mm (1.1163 in to 1.1169 in)
SERVICE LIMIT	28.34 mm (1.1157 in)
HYDRAULIC VALVE LIFTER RADIAL CLEARANCE	
SERVICE LIMIT	0.100 mm (.0039 in)

Hydraulic Valve Lifter Installation

For installation reverse the removal procedure. However pay attention to the following details.

1. Apply engine oil on the outside diameter of the hydraulic valve lifter.

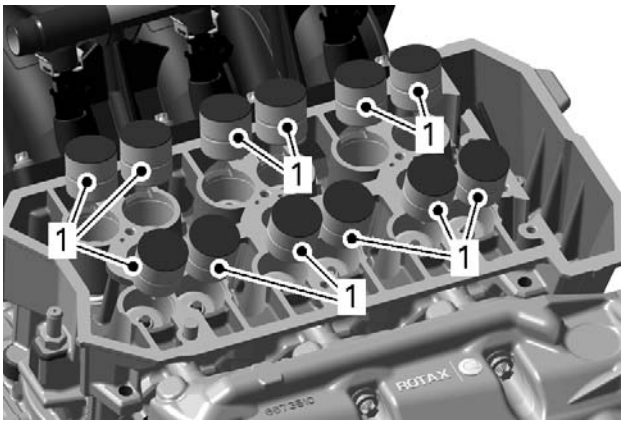

smr2014-020-030_b

1. *Apply engine oil on outer diameter*

CYLINDER HEAD

Cylinder Head Access

Remove central body. Refer to *BODY*.

Remove exhaust manifold. Refer to *EXHAUST*.

Remove intake manifold. Refer to *AIR INTAKE SYSTEM*.

Cylinder Head Removal

See procedures in this subsection to remove:
- Valve cover
- Camshafts
- Camshaft holder
- Hydraulic valve lifters.

Remove M6 cylinder head screws.

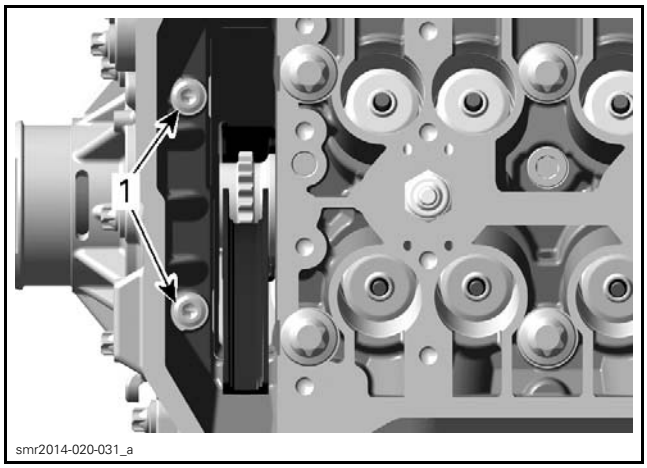

smr2014-020-031_a

1. *Remove M6 cylinder head screws*

Remove and discard M9 cylinder head screws.

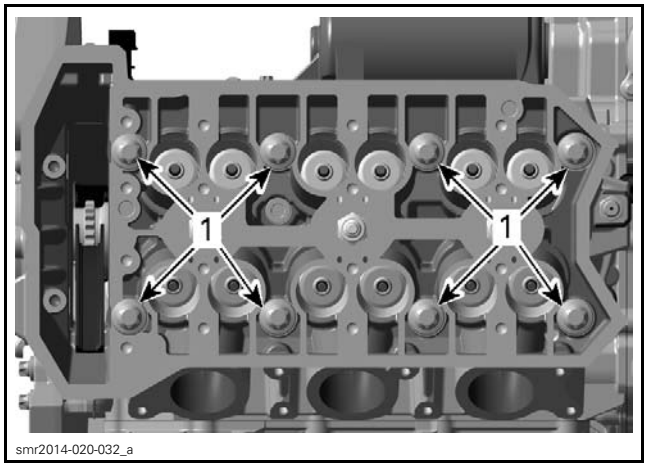

smr2014-020-032_a

1. *Remove M9 cylinder head screws*

Pull cylinder head off the cylinder block.

Remove and discard cylinder head gasket.

Cylinder Head Cleaning

1. Remove carbon deposits from combustion chambers, exhaust ports and piston tops.
2. Clean cylinder head, especially cylinder head screw surface from oil spillage.
3. Blow out the oil orifices with pressurized air and make sure they are not clogged.

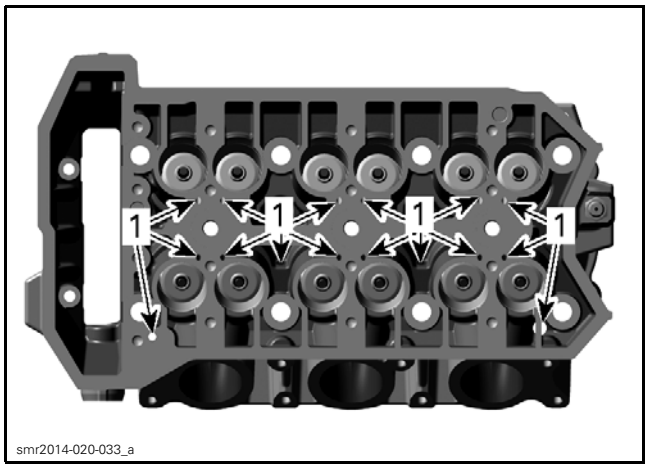

1. Oil orifices

Cylinder Head Inspection

Check for cracks between valve seats or other damage, if so, replace cylinder head.

Check cylinder head mating surface for flatness using a straight edge.

Check hydraulic valve lifter bores for scoring or other damage, if so, replace cylinder head.

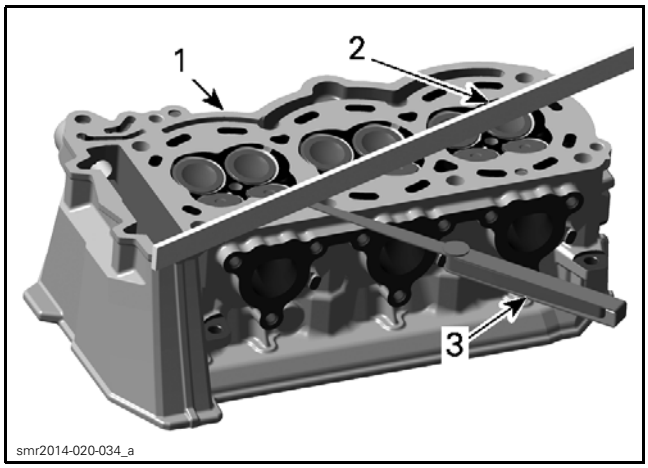

1. Cylinder head
2. Straight edge
3. Feeler gauge

Check cylinder head warpage.

CYLINDER HEAD WARPAGE	
SERVICE LIMIT	0.15 mm (.0059 in)

If warpage exceeds specification, resurface the cylinder head as follows.

Use a 400 - 600 grit wet sandpaper on a surface plate and gently grind off the mating surface.

NOTE: To ensure an even surface, rotate cylinder head several times during resurfacing.

Replace cylinder head, if resurfacing fails.

Cylinder Head Installation

For installation, reverse the removal procedure. However, pay attention to the following details.

1. Install a NEW cylinder head gasket.

NOTICE **Each installation of the cylinder head requires a NEW cylinder head gasket. Using a gasket twice would cause engine damage.**

2. Install cylinder head on the cylinder block.
3. Install NEW M9 cylinder head screws.

NOTICE **This assembly uses stretch screws. Always use NEW screws and strictly adhere to the tightening procedure.**

4. Tighten cylinder head screws as follows:

NOTE: Always perform step 1 on all M9 cylinder head screws before going to the next step.

CYLINDER HEAD M9 SCREWS TIGHTENING PROCEDURE	
STEP A	20 N•m ± 2 N•m (15 lbf•ft ± 1 lbf•ft)
STEP B	Additional 120° ± 5°

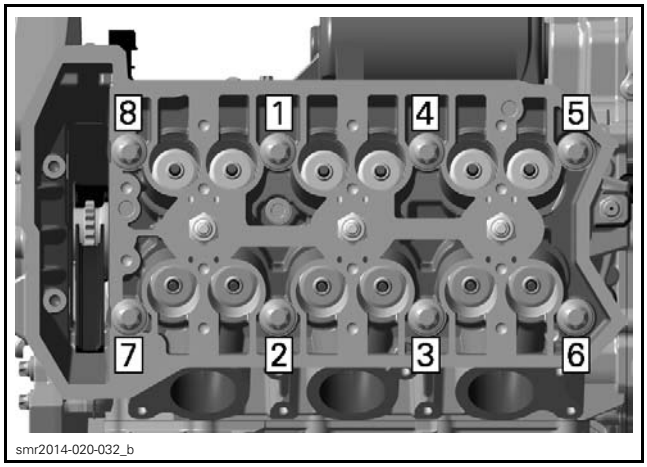

M9 SCREWS TIGHTENING SEQUENCE

NOTE: Use a torque angle gauge to carry out the **second step**.

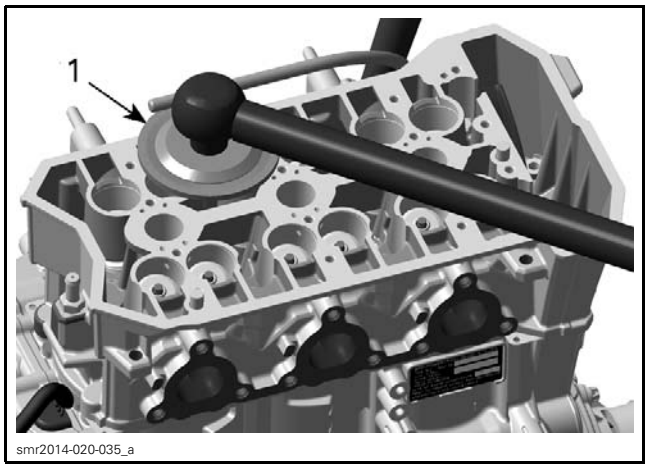

1. *Torque angle gauge*

5. Install M6 screws. Tighten as follows.

M6 CYLINDER HEAD SCREWS	
Tightening torque	9 N•m ± 1 N•m (80 lbf•**in** ± 9 lbf•**in**)

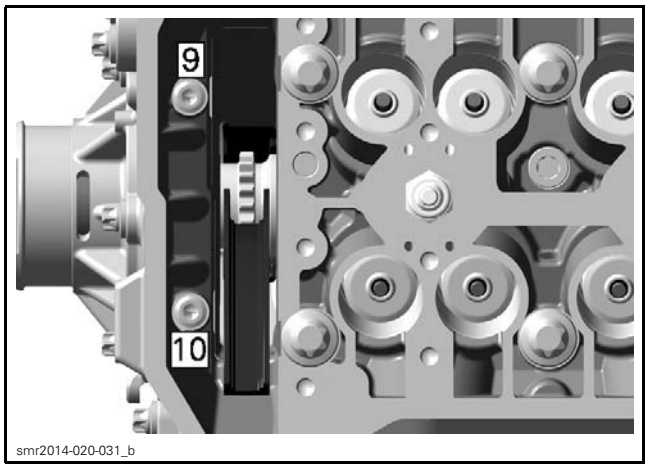

M6 SCREWS TIGHTENING SEQUENCE

VALVE SPRINGS

Valve Spring Removal

1. Remove *CYLINDER HEAD*, see procedure in this subsection.
2. Compress valve spring.

REQUIRED TOOLS	
VALVE SPRING COMPRESSOR (P/N 529 035 724)	
VALVE SPRING COMPRESSOR CUP (P/N 529 036 209)	

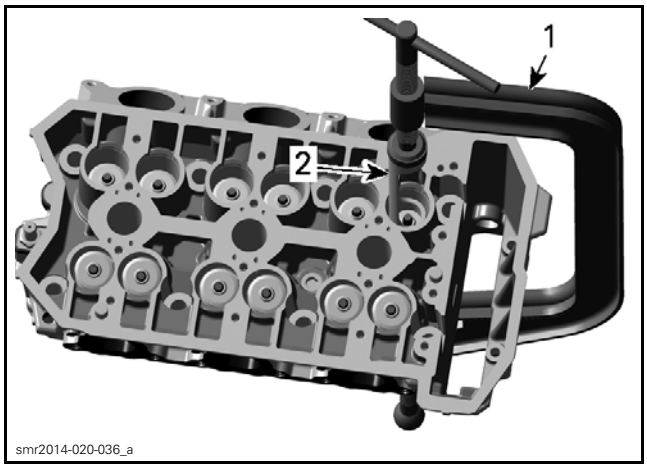

1. *Valve spring compressor clamp*
2. *Valve spring compressor cup*

3. Remove valve cotters.
4. Withdraw valve spring compressor tools.
5. Remove valve spring retainer and valve spring.

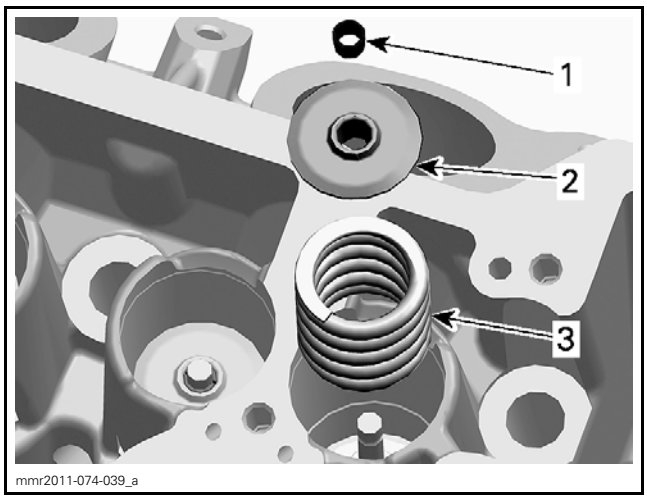

1. *Valve cotters*
2. *Valve spring retainer*
3. *Valve spring*

NOTE: Identify the position of each part very carefully, so it can be reinstalled in its original place.

Valve Spring Inspection

1. Check valve spring for rust, corrosion or other visible damage.
2. Check valve spring free length and straightness.

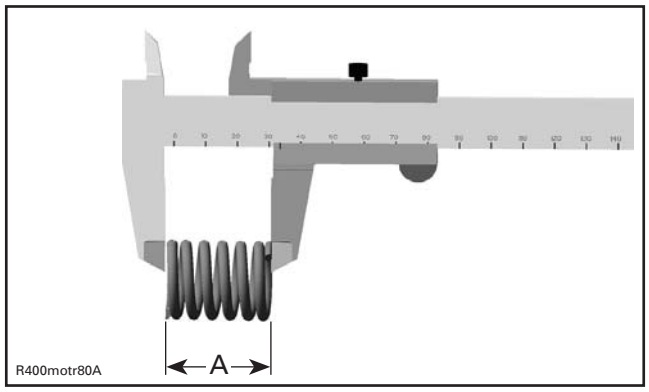

A. Spring free length

VALVE SPRING FREE LENGTH	
NEW	31.35 mm (1.2343 in)
SERVICE LIMIT	29.5 mm (1.1614 in)

Replace valve spring, if out of specification.

Valve Spring Installation

For installation, reverse the removal procedure. Pay attention to the following details.

NOTE: Ensure to reinstall all parts in their original position as marked during removal.

1. Apply some grease on valve cotters, so that they remain in place while releasing the valve spring.
2. Make sure valve cotters are properly engaged into valve stem groove.

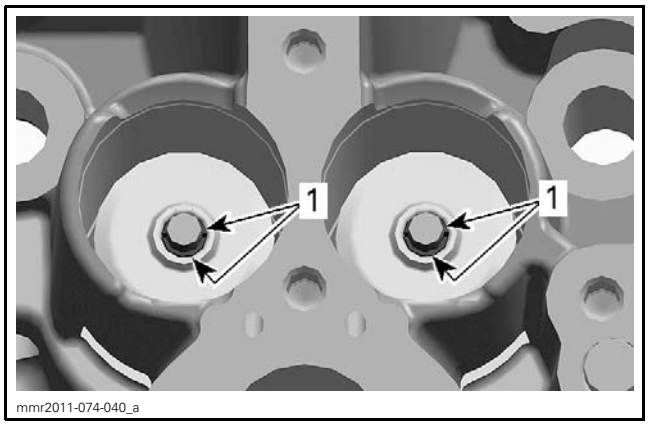

1. Valve cotters

3. After spring is installed, ensure it is properly locked by lightly tapping on valve stem end with a soft punch and a hammer so that valve opens and closes a few times.

NOTICE **Improperly locked valve spring will cause severe engine damage and hitting the valve stem end with excessive force could damage the valve.**

VALVES

Valve Removal

1. Remove *VALVE SPRING*, see procedure in this subsection.
2. Push on the valve stem, then pull valves out of cylinder head.

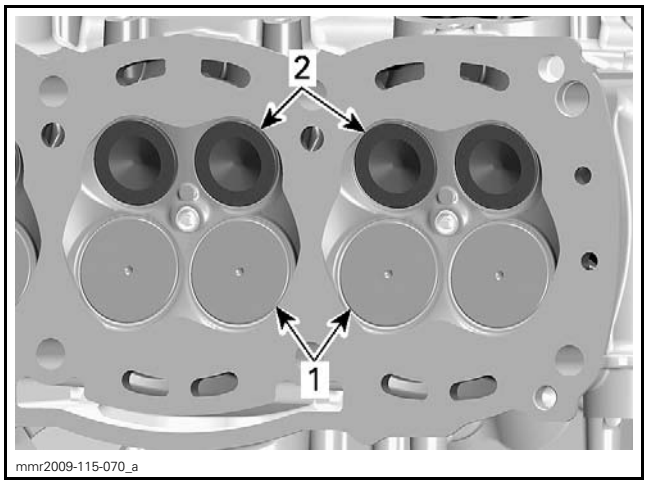

1. Intake valves 29 mm
2. Exhaust valves 25 mm

3. Remove and discard valve stem seal with special pliers.

REQUIRED TOOL	
SNAP-ON VALVE STEM SEAL PLIERS (P/N YA 8230)	

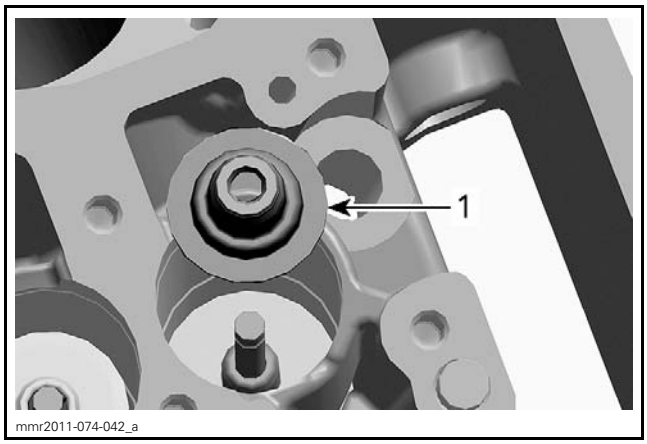

1. Valve stem seal

NOTE: Identify the position of each part very carefully, so it can be reinstalled in its original place.

Valve Inspection

Inspect valve surface, check for abnormal stem wear and bending.

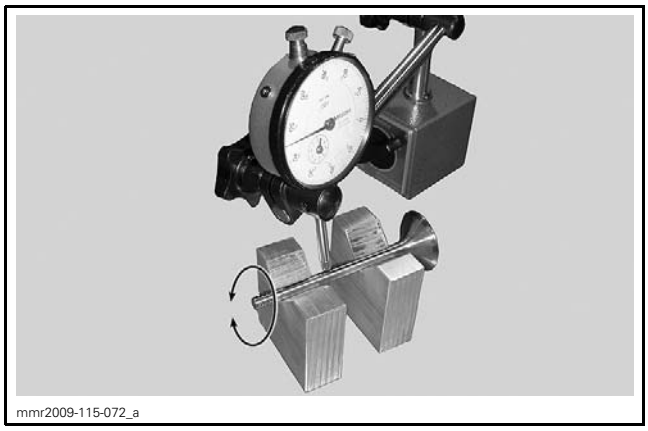

VALVE OUT OF ROUND INTAKE AND EXHAUST VALVE	
NEW	0.005 mm (.0002 in)
SERVICE LIMIT	0.06 mm (.0024 in)

Replace valve if out of specification.

Valve Stem and Valve Guide Clearance

1. Measure valve stem at three places, using a micrometer.

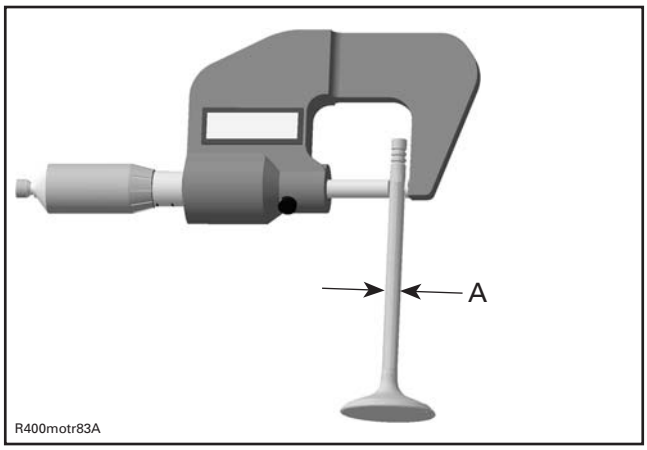

A. Valves stem diameter

VALVE STEM DIAMETER	
INTAKE VALVE	
NEW	4.958 mm to 4.972 mm (.1952 in to .1957 in)
SERVICE LIMIT	4.94 mm (.1945 in)
EXHAUST VALVE	
NEW	4.956 mm to 4.970 mm (.1951 in to .1957 in)
SERVICE LIMIT	4.94 mm (.1945 in)

Replace valve if stem is out of specification or if its surface is damaged or worn.

2. Measure valve guide inner diameter, using a small bore gauge.

NOTE: Clean valve guide from carbon deposits before measuring.

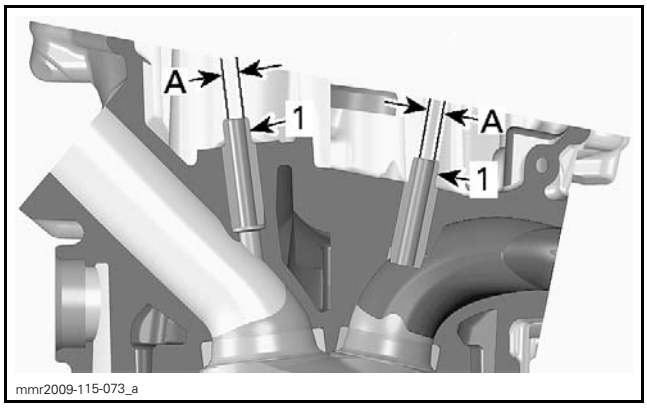

1. Valve guides
A. Valve guide inner diameter

VALVE GUIDE INNER DIAMETER	
NEW	5.000 mm to 5.012 mm (.1969 in to .1973 in)
SERVICE LIMIT	5.05 mm (.1988 in)

Replace cylinder head, if valve guide is out of specification.

Valve Face and Seat

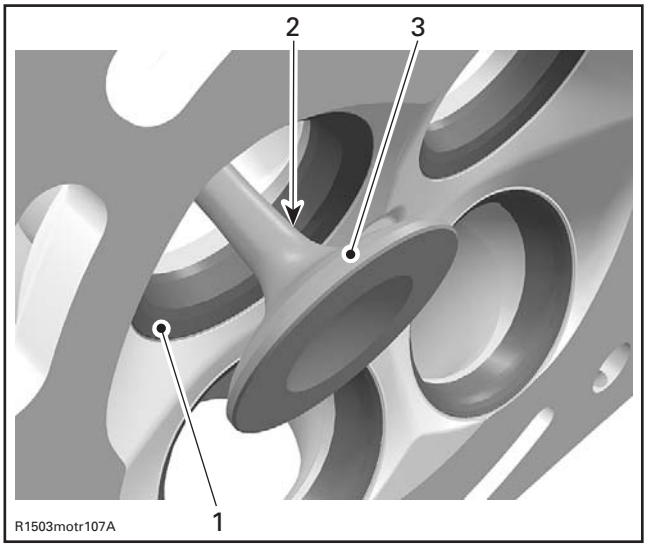

TYPICAL
1. Valve seat
2. Exhaust valve contaminated area
3. Valve face (contact surface to valve seat)

1. Check valve face and seat for burning, pitting and other signs of damage.

2. Check if valve seats properly in cylinder head. Proceed as follows.
   2.1 Apply some lapping compound on valve face and work valve on its seat with a lapping tool.

REQUIRED TOOL
SNAP-ON VALVE HOLDER (P/N VL2)

   NOTE: The location of contact area should be in center of valve face.

   2.2 Repeat procedure until valve seat and valve face fit together.
3. Measure valve seat contact width, using a caliper.

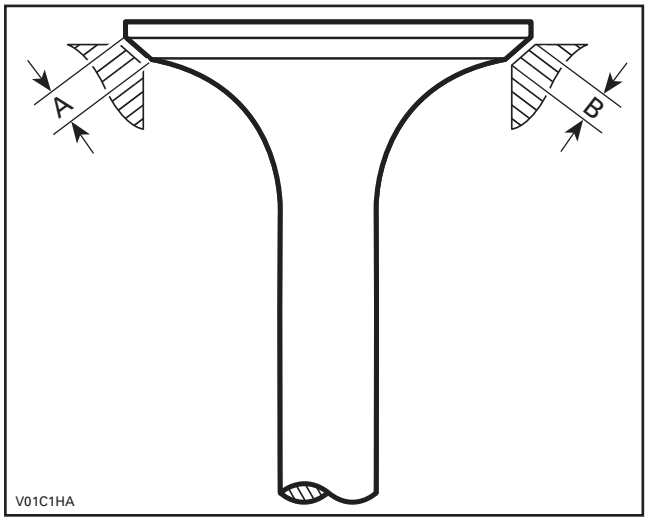

A. Valve face contact width
B. Valve seat contact width

VALVE SEAT CONTACT WIDTH (B)	
INTAKE VALVE	
NEW	1.05 mm to 1.35 mm (.041 in to .053 in)
SERVICE LIMIT	1.7 mm (.067 in)
EXHAUST VALVE	
NEW	1.25 mm to 1.45 mm (.049 in to .057 in)
SERVICE LIMIT	1.8 mm (.0709 in)

Replace parts if out of specification.

Valve Installation

For installation reverse the removal procedure. Pay attention to the following details.

NOTE: Ensure to reinstall all parts in their original position as marked during removal.

1. Install a NEW valve stem seal whenever valve is removed.
2. Apply engine oil on valve stem and carefully slide through cylinder head and valve stem seal.

NOTICE **Be careful when passing the valve stem through the sealing lip of the seal.**

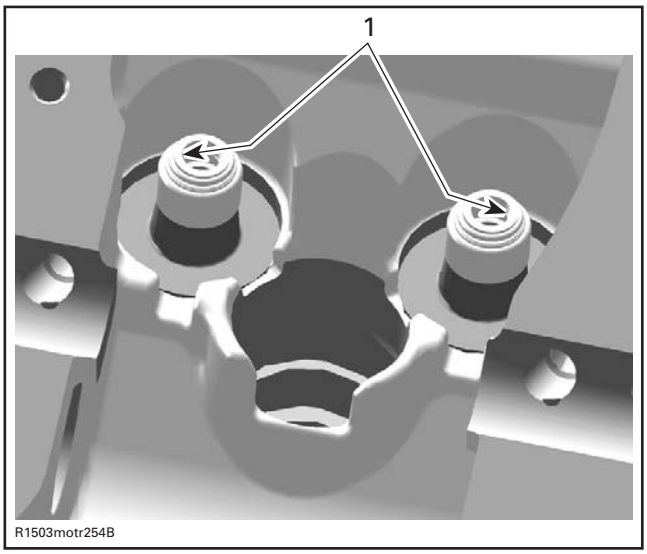

TYPICAL
1. Sealing lips of valve stem seal

3. Install *VALVE SPRING*. See procedure in this subsection.
4. Install all other removed parts.